Time-Code Receiver with Digitized Serial Output

Description

The U4224B is a bipolar integrated straight-through receiver circuit in the frequency range of 40 to 80 kHz. The device is designed for radio-controlled clock applications.

Features

- Very low power consumption
- Very high sensitivity
- High selectivity by using two crystal filters
- Power-down mode available
- Only a few external components necessary
- Digitalized serial output signal
- AGC hold mode

Block Diagram

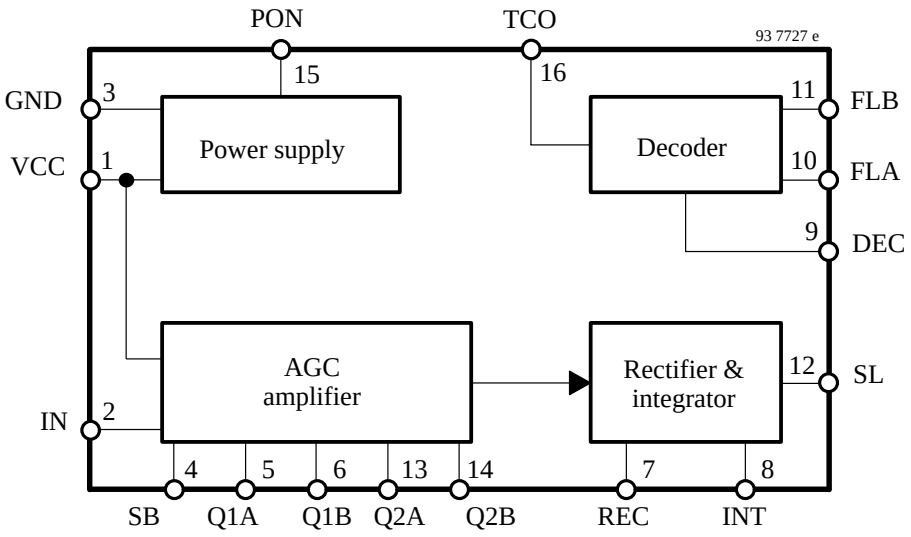

Figure 1.

Pin Description

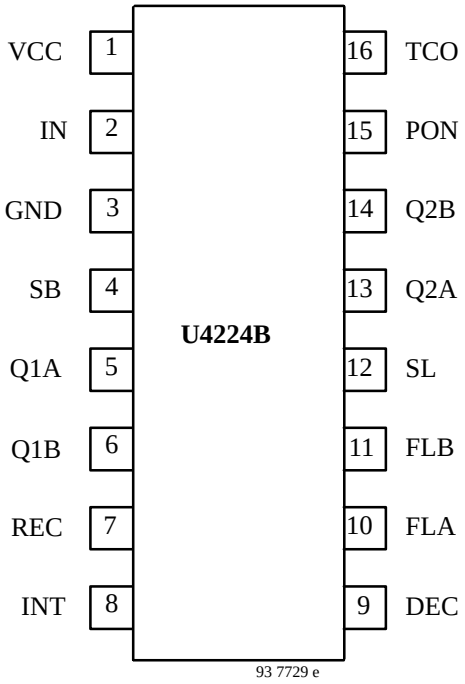

Figure 2. Pinning

Pin	Symbol	Function
1	VCC	Supply voltage
2	IN	Amplifier – Input
3	GND	Ground
4	SB	Bandwidth control
5	Q1A	Crystal filter 1
6	Q1B	Crystal filter 1
7	REC	Rectifier output
8	INT	Integrator output
9	DEC	Decoder input
10	FLA	Lowpass filter
11	FLB	Lowpass filter
12	SL	AGC hold mode
13	Q2A	Crystal filter 2
14	Q2B	Crystal filter 2
15	PON	Power ON/OFF control
16	TCO	Time-code output

IN

A ferrite antenna is connected between IN and VCC. For high sensitivity, the Q factor of the antenna circuit should be as high as possible. Please note that a high Q factor requires temperature compensation of the resonant frequency in most cases. Specifications are valid for Q > 30. An optimal signal-to-noise ratio will be achieved by a resonant resistance of 50 to 200 kΩ.

SB

A resistor R_{SB} is connected between SB and GND. It controls the bandwidth of the crystal filters. It is recommended: R_{SB} = 0 Ω for DCF 77.5 kHz, R_{SB} = 10 kΩ for 60 kHz WWVB and R_{SB} = open for JG2AS 40 kHz.

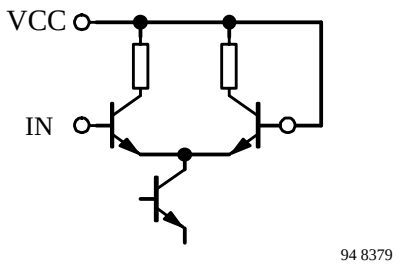

Figure 3.

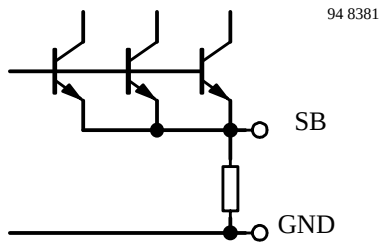

Figure 4.

Q1A, Q1B

In order to achieve a high selectivity, a crystal is connected between the Pins Q1A and Q1B. It is used with the serial resonant frequency of the time-code transmitter (e.g., 60 kHz WWVB, 77.5 kHz DCF or 40 kHz JG2AS).

The equivalent parallel capacitor of the filter crystal is internally compensated. The compensated value is about 0.7 pF. If full sensitivity and selectivity are not needed, the crystal filter can be substituted by a capacitor of 10 pF for DCF and WWVB and 22 pF for JG2AS.

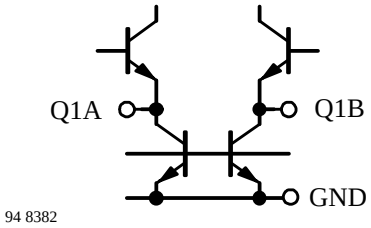

Figure 5.

REC

Rectifier output and integrator input: The capacitor C_1 between REC and INT is the lowpass filter of the rectifier and at the same time a damping element of the gain control.

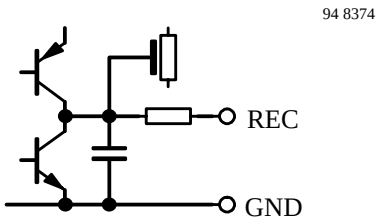

Figure 6.

DEC

Decoder input: Senses the current through the integration capacitor C_2. The dynamic input resistance has a value of about 420 kΩ and is low compared to the impedance of C_2.

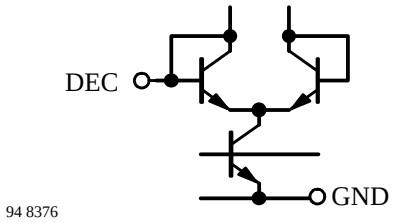

Figure 7.

SL

AGC hold mode: SL high ($V_{SL} = V_{CC}$) sets normal function, SL low ($V_{SL} = 0$) disconnects the rectifier and holds the voltage V_{INT} at the integrator output and also the AGC amplifier gain.

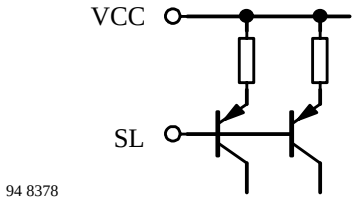

Figure 8.

INT

Integrator output: The voltage V_{INT} is the control voltage for the AGC. The capacitor C_2 between INT and DEC defines the time constant of the integrator. The current through the capacitor is the input signal of the decoder.

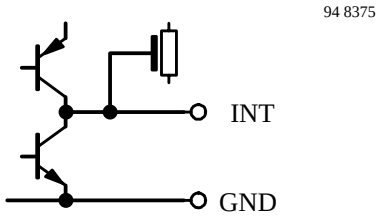

Figure 9.

FLA, FLB

Lowpass filter: A capacitor C_3 connected between FLA and FLB suppresses higher frequencies at the trigger circuit of the decoder.

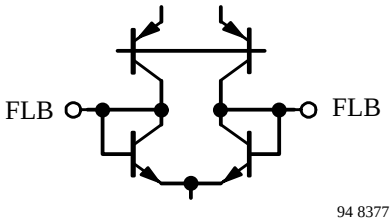

Figure 10.

Q2A, Q2B

According to Q1A/Q1B, a crystal is connected between the Pins Q2A and Q2B. It is used with the serial resonant frequency of the time-code transmitter (e.g., 60 kHz WWVB, 77.5 kHz DCF or 40 kHz JG2AS). The equivalent parallel capacitor of the filter crystal is internally compensated. The value of the compensation is about 0.7 pF.

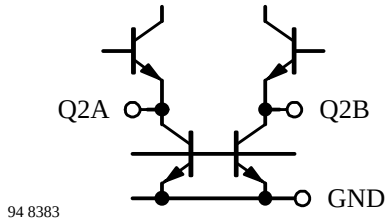

Figure 11.

PON

If PON is connected to GND, the receiver will be activated. The set-up time is typically 0.5 s after applying GND at this pin. If PON is connected to VCC, the receiver will switch to power-down mode.

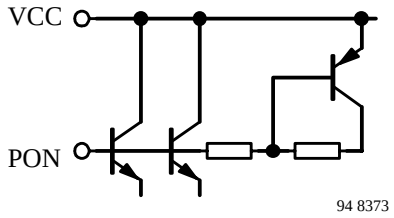

Figure 12.

TCO

The digitized serial signal of the time-code transmitter can be directly decoded by a microcomputer. Details about the time-code format of several transmitters are described separately.

The output consists of a PNP-NPN push-pull-stage. It should be taken into account that in power-down mode (PON = high), TCO will be high.

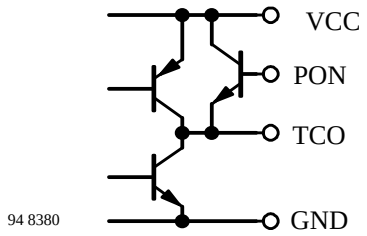

Figure 13.

An additional improvement of the driving capability may be achieved by using a CMOS driver circuit or an NPN transistor with pull-up resistor connected to the collector (see figure 14). When using a CMOS driver, this circuit must be connected to VCC.

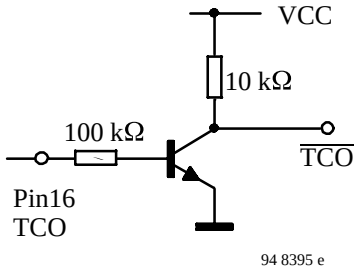

Figure 14.

Please note:
The signals and voltages at the Pins REC, INT, FLA, FLB, Q1A, Q1B, Q2A and Q2B cannot be measured by standard measurement equipment due to very high internal impedances. For the same reason, the PCB should be protected against surface humidity.

Design Hints for the Ferrite Antenna

The bar antenna is a very critical device of the complete clock receiver. Observing some basic RF design rules helps to avoid possible problems. The IC requires a resonant resistance of 50 kΩ to 200 kΩ. This can be achieved by a variation of the L/C-relation in the antenna circuit. It is not easy to measure such high resistances in the RF region. A more convenient way is to distinguish between the different bandwidths of the antenna circuit and to calculate the resonant resistance afterwards.

Thus, the first step in designing the antenna circuit is to measure the bandwidth. Figure 16 shows an example for the test circuit. The RF signal is coupled into the bar antenna by inductive means, e.g., a wire loop. It can be measured by a simple oscilloscope using the 10:1 probe. The input capacitance of the probe, typically about 10 pF, should be taken into consideration. By varying the frequency of the signal generator, the resonant frequency can be determined.

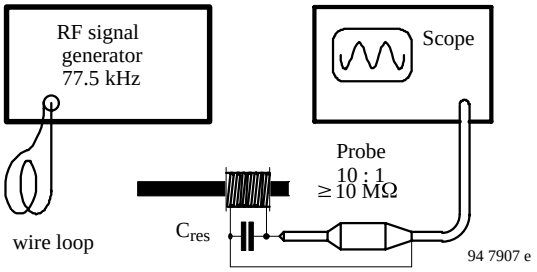

Figure 15.

At the point where the voltage of the RF signal at the probe drops by 3 dB, the two frequencies can then be measured. The difference between these two frequencies is called the bandwidth BW_A of the antenna circuit. As the value of the capacitor C_{res} in the antenna circuit is known, it is easy to compute the resonant resistance according to the following formula:

$$R_{res} = \frac{1}{2 \times \pi \times BW_A \times C_{res}}$$

where
R_{res} is the resonant resistance, BW_A is the measured bandwidth (in Hz), C_{res} is the value of the capacitor in the antenna circuit (in Farad).

If high inductance values and low capacitor values are used, the additional parasitic capacitances of the coil ($\leq$ 20 pF) must be considered. The Q value of the capacitor should be no problem if a high Q type is used. The Q value of the coil differs more or less from the DC resistance of the wire. Skin effects can be observed but do not dominate.

Therefore, it should not be a problem to achieve the recommended values of the resonant resistance. The use of thicker wire increases the Q value and accordingly reduces bandwidth. This is advantageous in order to improve reception in noisy areas. On the other hand, temperature compensation of the resonant frequency might become a problem if the bandwidth of the antenna circuit is low compared to the temperature variation of the resonant frequency. Of course, the Q value can also be reduced by a parallel resistor.

Temperature compensation of the resonant frequency is a must if the clock is used at different temperatures. Please ask your supplier of bar antenna material and of capacitors for specified values of the temperature coefficient.

Furthermore, some critical parasitics have to be considered. These are shortened loops (e.g., in the ground line of the PCB board) close to the antenna and undesired loops in the antenna circuit. Shortened loops decrease the Q value of the circuit. They have the same effect like conducting plates close to the antenna. To avoid undesired loops in the antenna circuit, it is recommended to mount the capacitor C_{res} as close as possible to the antenna coil or to use a twisted wire for the antenna-coil connection. This twisted line is also necessary to reduce feedback of noise from the microprocessor to the IC input. Long connection lines must be shielded.

A final adjustment of the time-code receiver can be carried out by pushing the coil along the bar antenna. The maximum of the integrator output voltage V_{INT} at Pin INT indicates the resonant point. But attention: The load current should not exceed 1 nA, that means an input resistance $\geq$ 1 GΩ of the measuring device is required. Therefore, a special DVM or an isolation amplifier is necessary.

Absolute Maximum Ratings

Parameters	Symbol	Value	Unit
Supply voltage	V_{CC}	5.25	V
Ambient temperature range	T_{amb}	–25 to +75	°C
Storage temperature range	R_{stg}	–40 to +85	°C
Junction temperature	T_j	125	°C
Electrostatic handling (MIL Standard 883 D), except Pins 5, 6, 13 and 14	$\pm V_{ESD}$	2000	V

Thermal Resistance

Parameters	Symbol	Value	Unit
Thermal resistance	R_{thJA}	70	K/W

Electrical Characteristics

V_{CC} = 3 V, reference point Pin 3, input signal frequency 80 kHz, T_{amb} = 25°C, unless otherwise specified

Parameters	Test Conditions / Pin	Symbol	Min.	Typ.	Max.	Unit
Supply voltage range	Pin 1	V_{CC}	1.2		5.25	V
Supply current	Pin 1 Without reception signal with reception signal = 200 µV OFF mode	I_{CC}		 15 	 30 25 0.1	 µA µA µA
Set-up time after V_{CC} ON	V_{CC} = 1.5 V	t		2		s
AGC amplifier input; IN Pin 2						
Reception frequency range		f_{in}	40		80	kHz
Minimum input voltage	R_{res} = 100 kΩ, Q_{res} > 30	V_{in}		1	1.5	µV
Maximum input voltage		V_{in}	40	80		mV
Input capacitance to ground		C_{in}		1.5		pF
Timing code output; TCO Pin 16						
Output voltage HIGH LOW	 R_{LOAD} = 870 kΩ to GND R_{LOAD} = 650 kΩ to VCC	 V_{OH} V_{OL}	 V_{CC}-0.4 		 0.4	 V V
Output current HIGH LOW	 V_{TCO} = V_{CC}/2 V_{TCO} = V_{CC}/2	 I_{SOURCE} I_{SINK}	 3 4	 10 12		 µA µA
Decoding characteristics	DCF77 based on the values of the application circuit fig. 17 TCO pulse width 100 ms TCO pulse width 200 ms Delay compared with the transient of the RF signal: drop down (start transition) rise for 100 ms pulse (end transition) rise for 200 ms pulse (end transition)	 t_{100} t_{200} t_s t_{e1} t_{e2}	 60 160 30 25 10	 90 190 	 130 230 60 55 30	 ms ms ms ms ms
Decoding characteristics	WWVB based on the values of the application circuit fig. 18 TCO pulse width 200 ms TCO pulse width 500 ms TCO pulse width 800 ms Delay compared with the transient of the RF signal: drop down (start transition) rise (end transition)	 t_{200} t_{500} t_{800} t_s t_e	 140 440 740 45 20		 200 500 800 80 45	 ms ms ms ms ms

Electrical Characteristics

V_{CC} = 3 V, reference point Pin 3, input signal frequency 80 kHz, T_{amb} = 25°C, unless otherwise specified

Parameters	Test Conditions / Pin	Symbol	Min.	Typ.	Max.	Unit
Decoding characteristics	JG2AS based on the values of the application circuit fig. 19:					
	TCO pulse width 200 ms	t_{200}	240		410	ms
	TCO pulse width 500 ms	t_{500}	420		490	ms
	TCO pulse width 800 ms	t_{800}	720		790	ms
	Delay compared with the transient of the RF signal:					
	start transition (RF on)	t_s	10		110	ms
	end transition (RF off)	t_e	30		220	ms
Power-ON/OFF control; PON Pin 15						
Input voltage	Required $I_{IN} \geqq 0.5$ µA					
HIGH			V_{CC}-0.2			V
LOW					V_{CC}-1.2	V
Input current	V_{CC} = 3V	I_{IN}	1.4	1.7	2	µA
	V_{CC} = 1.5 V			0.7		µA
	V_{CC} = 5 V			3		µA
Set-up time after PON		t		0.5	2	s
AGC hold mode; SL Pin 12						
Input voltage	Required $I_{IN} \geqq 0.5$ µA					
HIGH			V_{CC}-0.2			V
LOW					V_{CC}-1.2	V
Input current	$V_{in} = V_{CC}$				0.1	µA
	V_{in} = GND			2.5		µA
Rejection of interference signals	$\lvert f_d - f_{ud} \rvert$ = 625 Hz V_d = 3 µV, f_d = 77.5 kHz					
	using 2 crystal filters	a_f		43		dB
	using 1 crystal filter	a_f		22		dB

Test Circuit (for Fundamental Function)

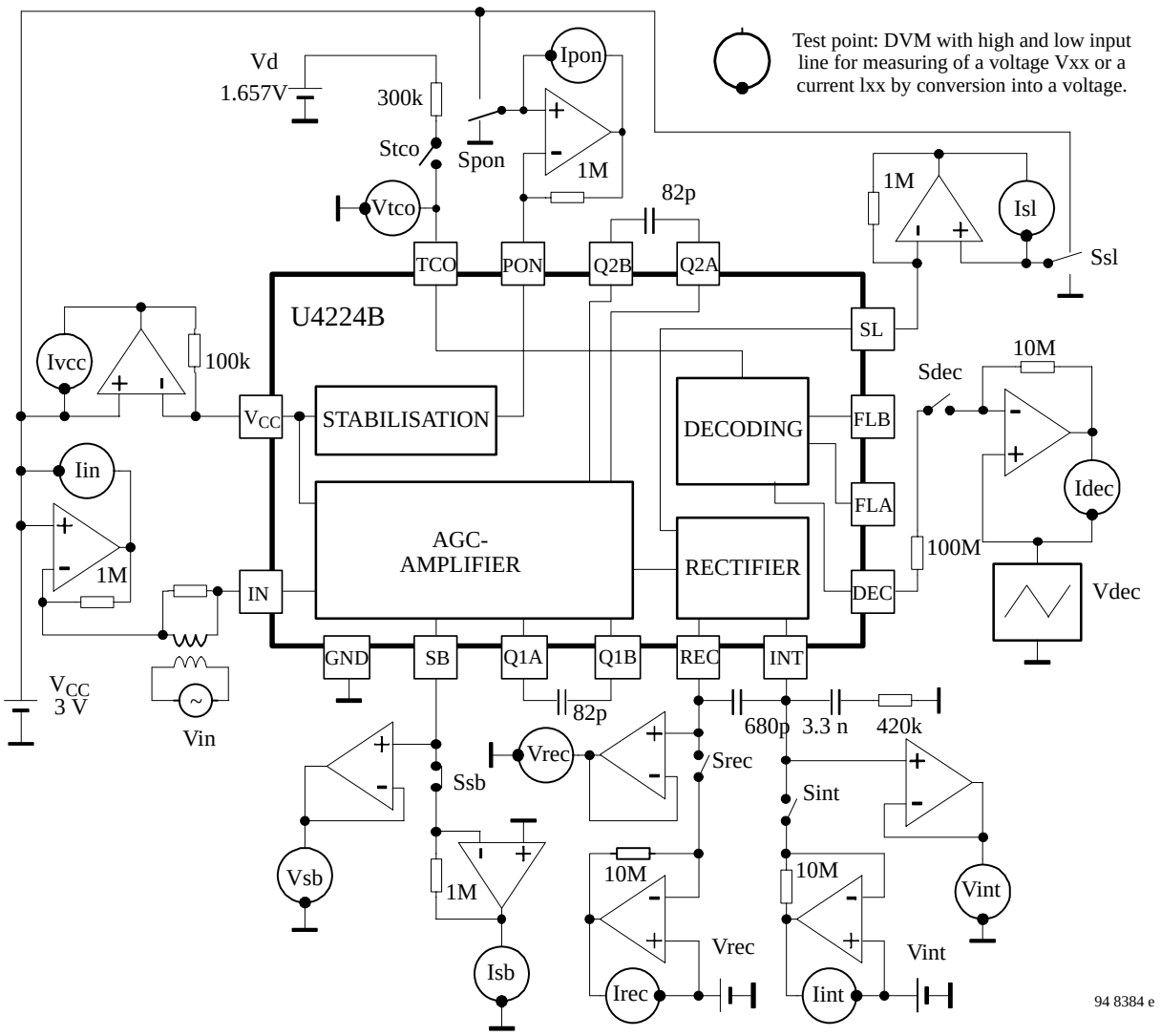

Figure 16.

Application Circuit for DCF 77.5 kHz

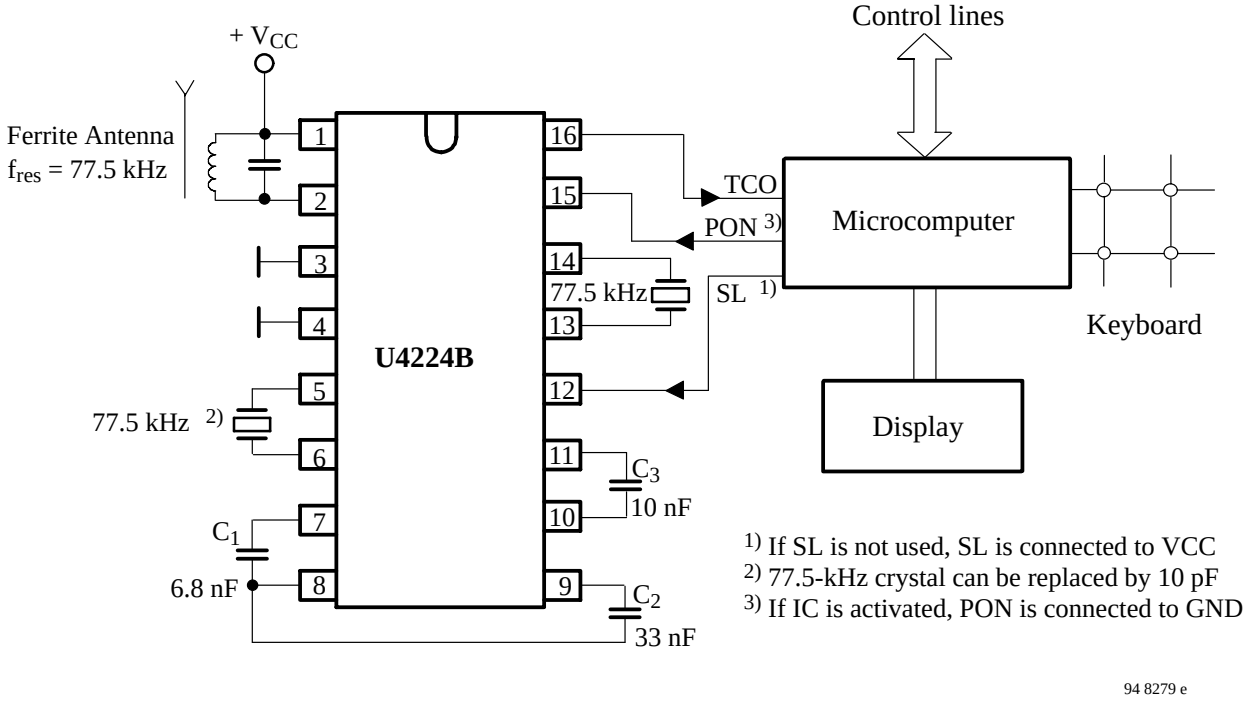

Figure 17.

Application Circuit for WWVB 60 kHz

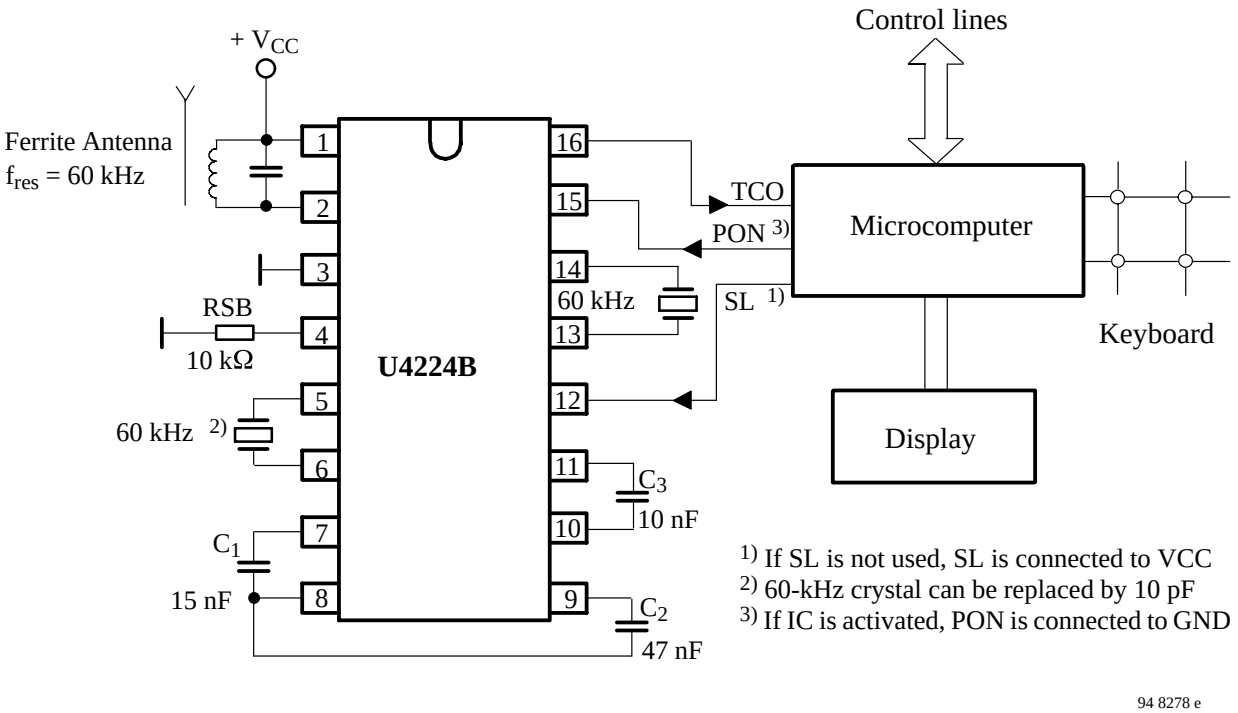

Figure 18.

Application Circuit for JG2AS 40 kHz

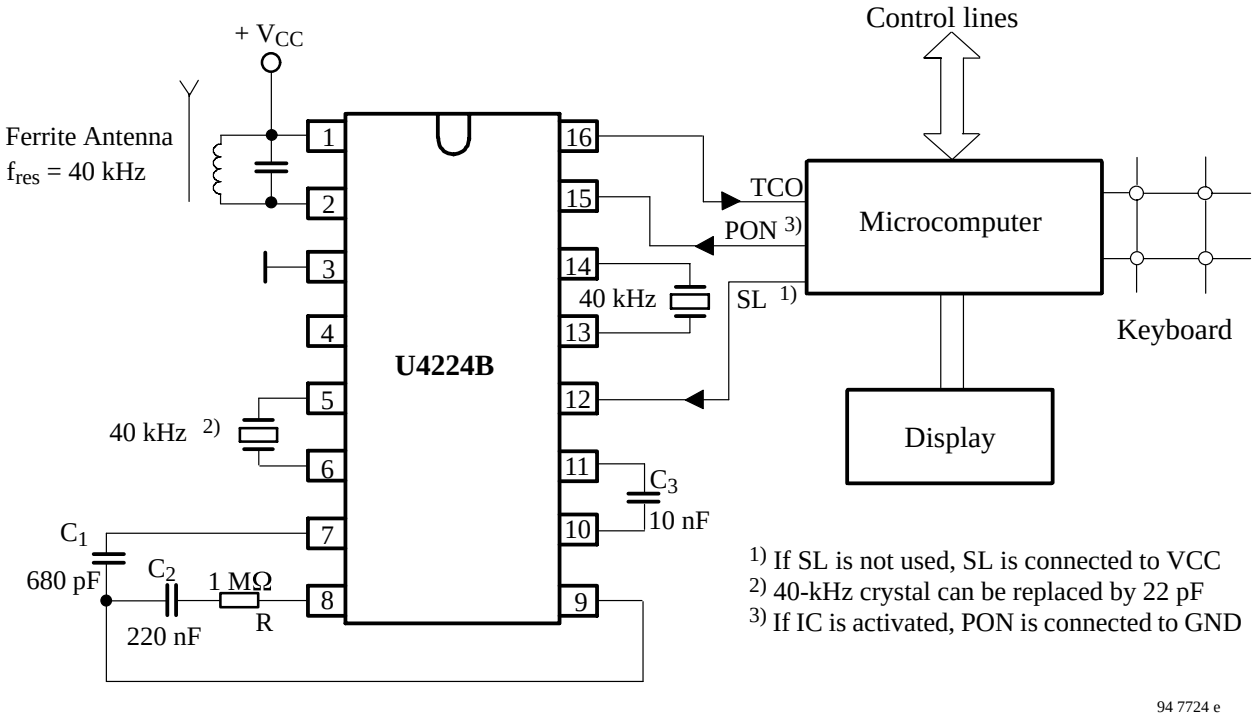

Figure 19.

Information on the German Transmitter

Station: DCF 77,
Frequency 77.5 kHz,
Transmitting power 50 kW

Location: Mainflingen/Germany,
Geographical coordinates: 50°° 0.1'N, 09°° 00'E
Time of transmission: permanent

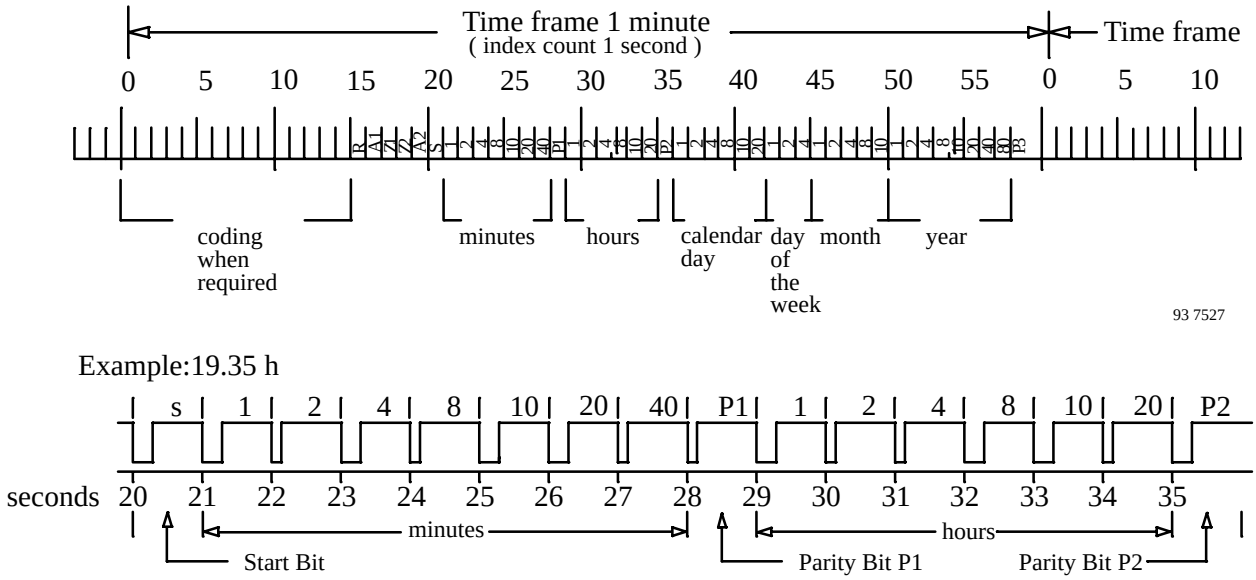

Figure 20.

Modulation

The carrier amplitude is reduced to 25% at the beginning of each second for a period of 100 ms (binary zero) or 200 ms (binary one), except the 59th second.

Time-Code Format (based on Information of Deutsche Bundespost)

The time-code format consists of 1-minute time frames. There is no modulation at the beginning of the 59th second to indicate the switch over to the next 1-minute time frame. A time frame contains BCD-coded information of minutes, hours, calendar day, day of the week, month and year between the 20th second and 58th second of the time frame, including the start bit S (200 ms) and parity bits P1, P2 and P3. Furthermore, there are 5 additional bits R (transmission by reserve antenna), A1 (announcement of change-over to summer time), Z1 (during summer time 200 ms, otherwise 100 ms), Z2 (during standard time 200 ms, otherwise 100 ms) and A2 (announcement of leap second) transmitted between the 15th second and 19th second of the time frame.

Information on the British Transmitter

Station: MSF
Frequency 60 kHz
Transmitting power 50 kW
Location: Teddington, Middlesex

Geographical coordinates: 52°° 22'N, 01° 11'W
Time of transmission: permanent, except the first Tuesday of each month from 10.00 h to 14.00 h.

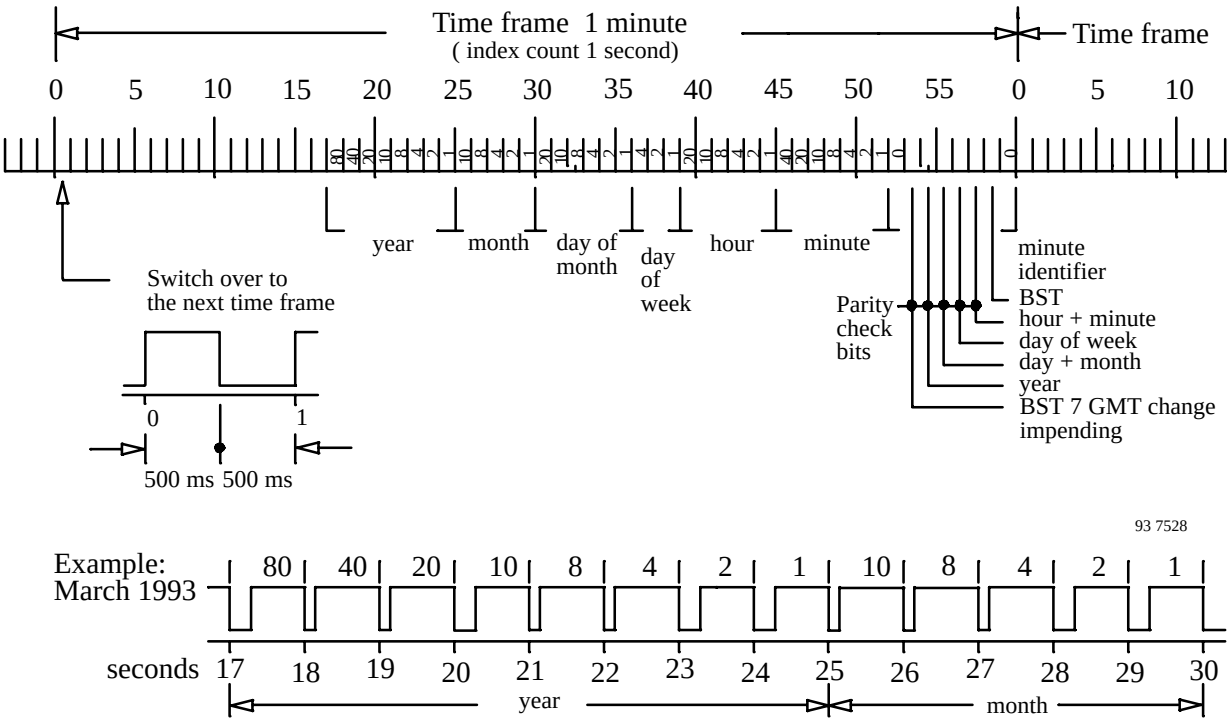

Figure 21.

Modulation

The carrier amplitude is switched off at the beginning of each second for a period of 100 ms (binary zero) or 200 ms (binary one).

Time-Code Format

The time-code format consists of 1-minute time frames. A time frame contains BCD-coded information of year, month, calendar day, day of the week, hours and minutes. At the switch-over to the next time frame, the carrier amplitude is reduced for a period of 500 ms.

The prescence of the fast code during the first 500 ms at the beginning of the minute in not guaranteed. The transmission rate is 100 bits/s and the code contains information of hour, minute, day and month.

Information on the US Transmitter

Station: WWVB
Frequency 60 kHz
Transmitting power 10 kW

Location: Fort Collins
Geographical coordinates: 40°° 40’N, 105°° 03’W
Time of transmission: permanent

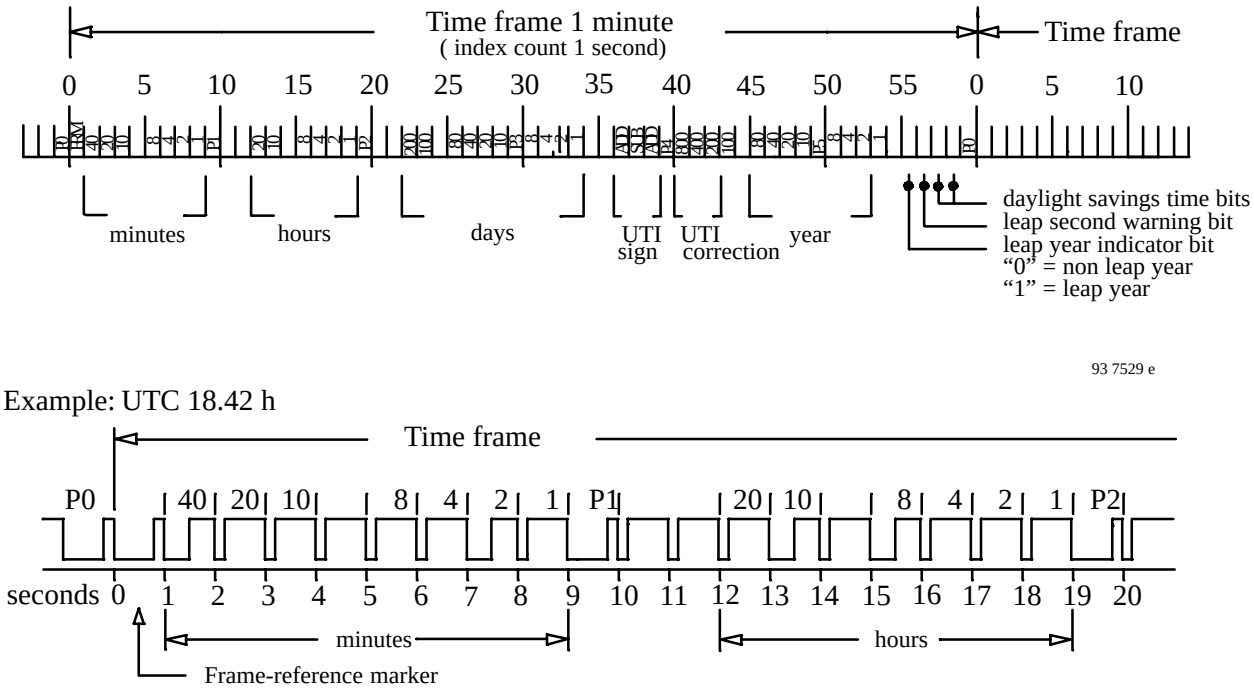

Figure 22.

Modulation

The carrier amplitude is reduced by 10 dB at the beginning of each second and is restored within 500 ms (binary one) or within 200 ms (binary zero).

Time-Code Format

The time-code format consists of 1-minute time frames. A time frame contains BCD1–coded information of minutes, hours, days and year. In addition, there are 6 position-identifier markers (P0 thru P5) and 1 frame-reference marker with reduced carrier amplitude of 800 ms duration.

Information on the Japanese Transmitter

Station: JG2AS
Frequency 40 kHz
Transmitting power 10 kW

Location: Sanwa, Ibaraki
Geographical coordinates: 36° 11’ N, 139° 51’ E
Time of transmission: permanent

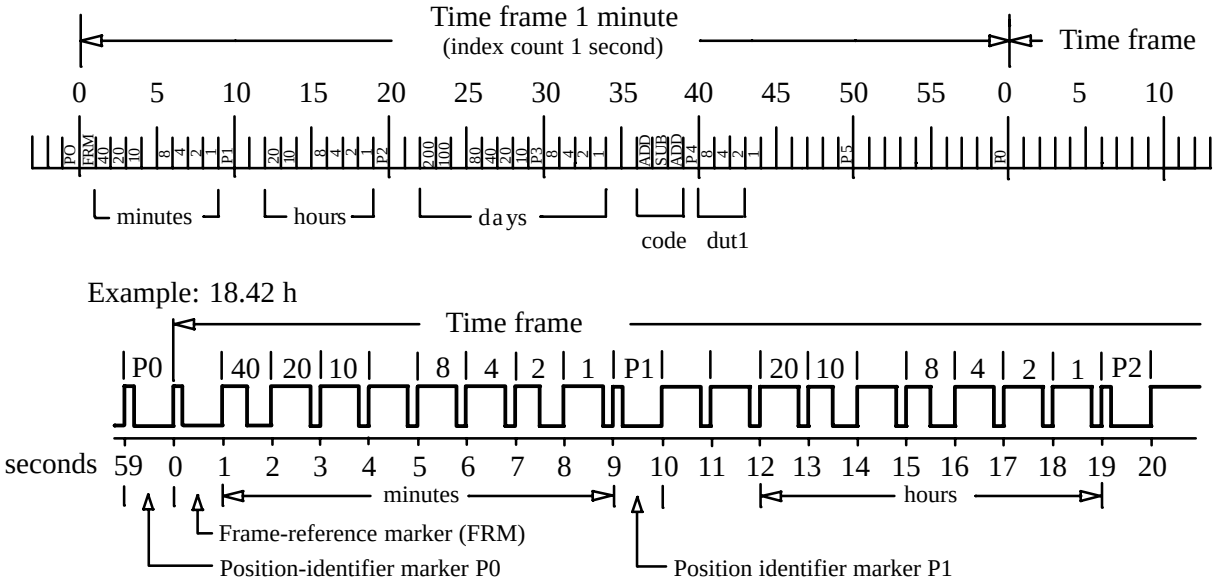

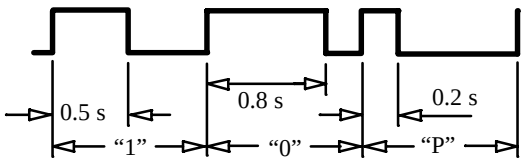

0.5 second: Binary one
0.8 second: Binary zero
0.2 second: Identifier markers P0...P5

93 7508 e

Figure 23.

Modulation

The carrier amplitude is 100% at the beginning of each second and is switched off after 500 ms (binary one) or after 800 ms (binary zero).

Time-Code Format

The time-code format consists of 1-minute time frames. A time frame contains BCD-coded information of minutes, hours and days. In addition, there are 6 position-identifier markers (P0 thru P5) and 1 frame-reference marker (FRM) with reduced carrier amplitude of 800 ms duration.

Ordering and Package Information

Extended Type Number	Package	Remarks
U4224B-CFL	SO16L plastic	
U4224B-CFLG3	SO16L plastic	Taping according to IEC–286–3

Package Information

Package SO16L

Dimensions in mm

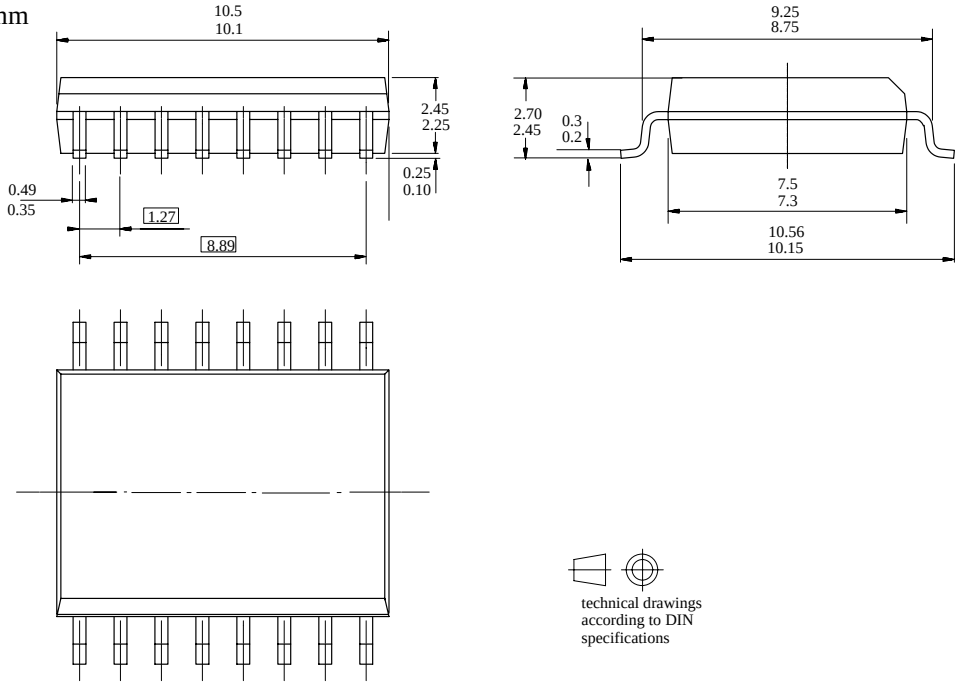

Ozone Depleting Substances Policy Statement

It is the policy of **TEMIC Semiconductor GmbH** to

1. Meet all present and future national and international statutory requirements.

2. Regularly and continuously improve the performance of our products, processes, distribution and operating systems with respect to their impact on the health and safety of our employees and the public, as well as their impact on the environment.

It is particular concern to control or eliminate releases of those substances into the atmosphere which are known as ozone depleting substances (ODSs).

The Montreal Protocol (1987) and its London Amendments (1990) intend to severely restrict the use of ODSs and forbid their use within the next ten years. Various national and international initiatives are pressing for an earlier ban on these substances.

TEMIC Semiconductor GmbH has been able to use its policy of continuous improvements to eliminate the use of ODSs listed in the following documents.

1. Annex A, B and list of transitional substances of the Montreal Protocol and the London Amendments respectively

2. Class I and II ozone depleting substances in the Clean Air Act Amendments of 1990 by the Environmental Protection Agency (EPA) in the USA

3. Council Decision 88/540/EEC and 91/690/EEC Annex A, B and C (transitional substances) respectively.

TEMIC Semiconductor GmbH can certify that our semiconductors are not manufactured with ozone depleting substances and do not contain such substances.

We reserve the right to make changes to improve technical design and may do so without further notice.
Parameters can vary in different applications. All operating parameters must be validated for each customer application by the customer. Should the buyer use TEMIC products for any unintended or unauthorized application, the buyer shall indemnify TEMIC against all claims, costs, damages, and expenses, arising out of, directly or indirectly, any claim of personal damage, injury or death associated with such unintended or unauthorized use.

TEMIC Semiconductor GmbH, P.O.B. 3535, D-74025 Heilbronn, Germany
Telephone: 49 (0)7131 67 2594, Fax number: 49 (0)7131 67 2423